DIY PS503A V2
Dual Tracking Power Supply

Pos Reg

File: PosReg_v2.kicad_sch

Neg Reg

File: NegReg_v2.kicad_sch

Power Rails

File: PowerRails_v2.kicad_sch

Ref & Dual Tracking

File: DualTracking_v2.kicad_sch

VoltMeter

File: VoltMeter_v2.kicad_sch

Sheet: /		
File: DIY PS503A_v2.kicad_sch		
Title:		
Size: A4	Date:	**Rev:**
KiCad E.D.A. 9.0.7		Id: 1/6

Positive Supply V2

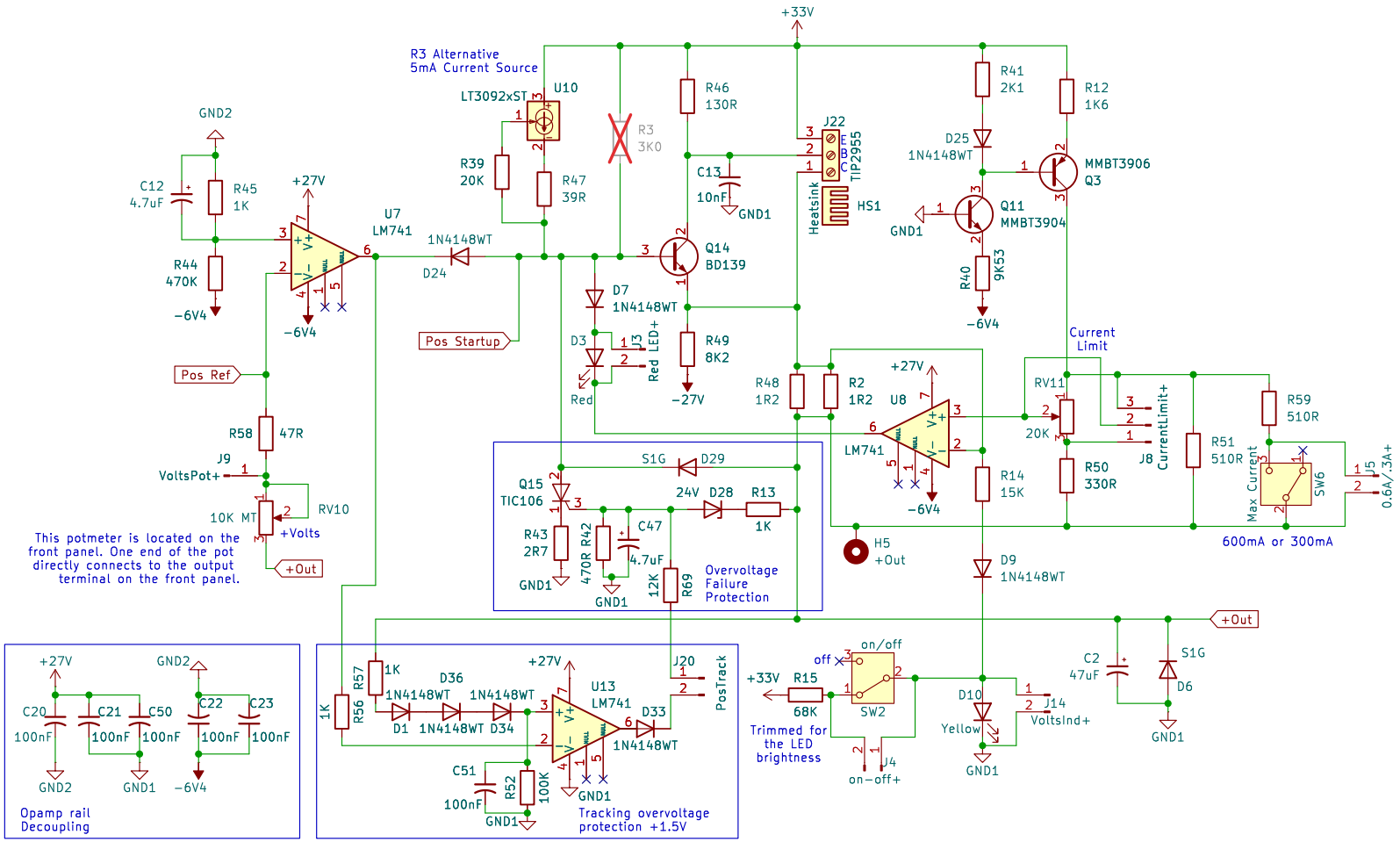

Sheet: /Pos Reg/
File: PosReg_v2.kicad_sch

Title:

Size: A4	Date:	Rev:
KiCad E.D.A. 9.0.7		Id: 2/6

Negative Supply V2

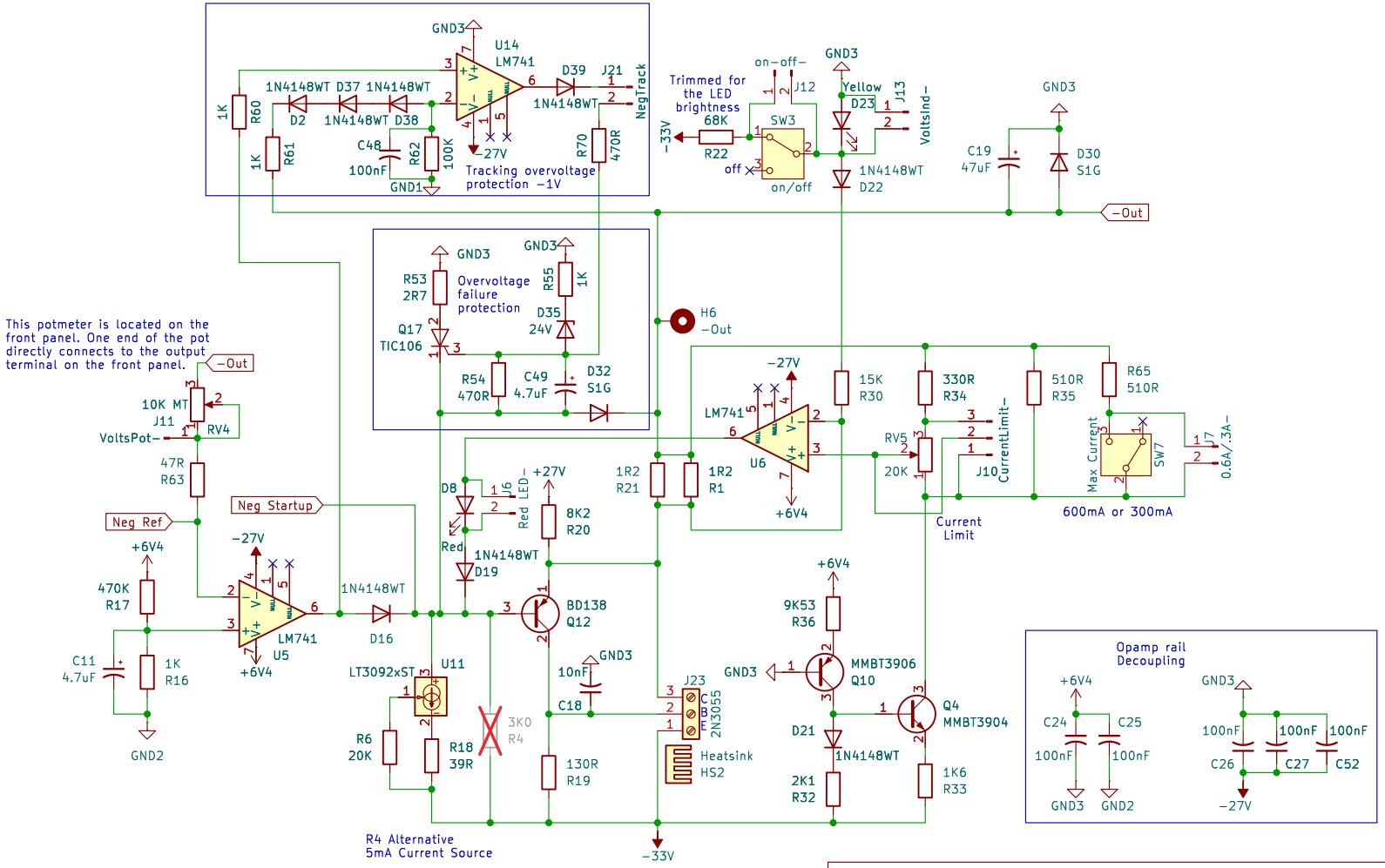

Sheet: /Neg Reg/
File: NegReg_v2.kicad_sch

Title:

Size: A4	Date:	Rev:
KiCad E.D.A. 9.0.7		Id: 3/6

VRef and Dual Voltage Tracking V2

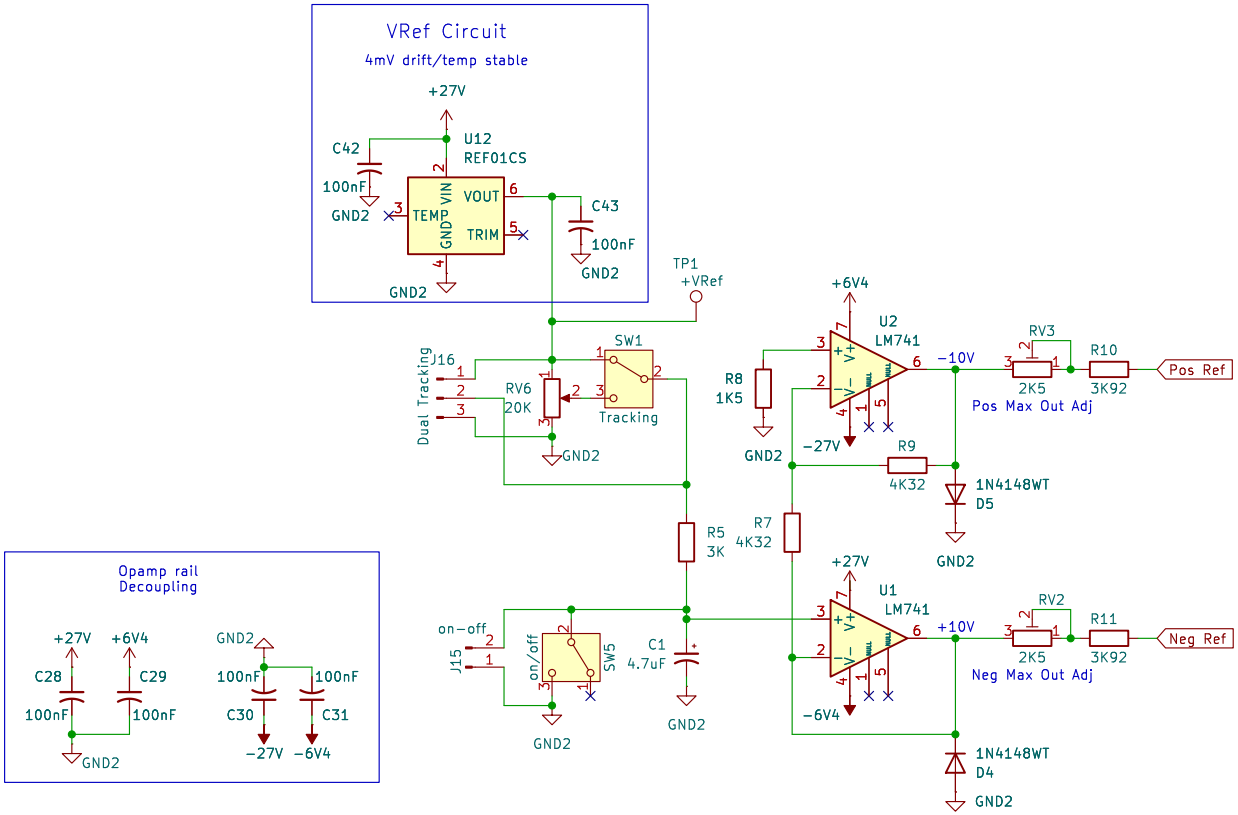

Sheet: /Ref & Dual Tracking/
File: DualTracking_v2.kicad_sch

Title:

Size: A4	Date:	Rev:
KiCad E.D.A. 9.0.7		Id: 4/6

Power Rails V2

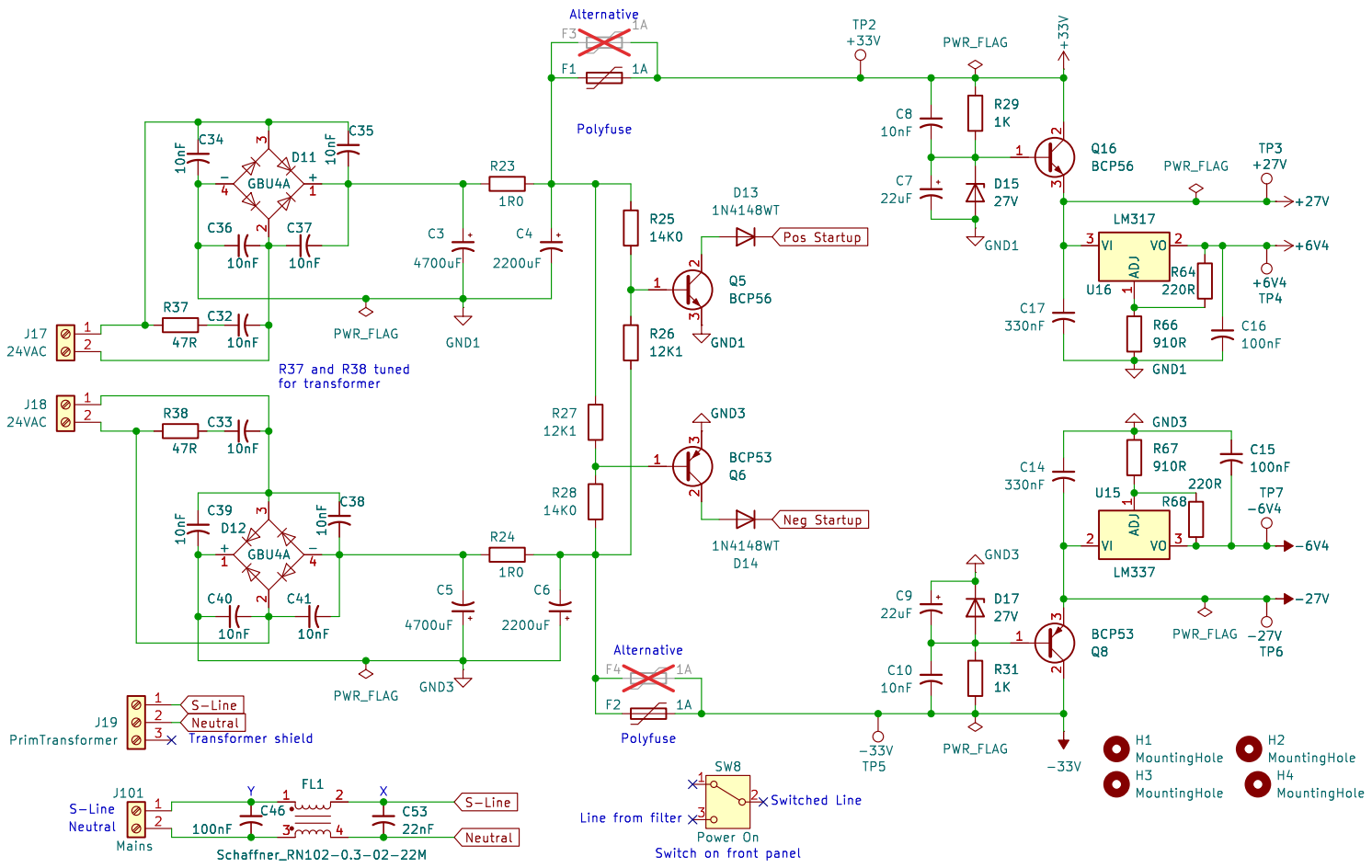

Sheet: /Power Rails/
File: PowerRails_v2.kicad_sch

Title:

Size: A4	Date:	Rev:
KiCad E.D.A. 9.0.7		Id: 5/6

Volt Meter V2

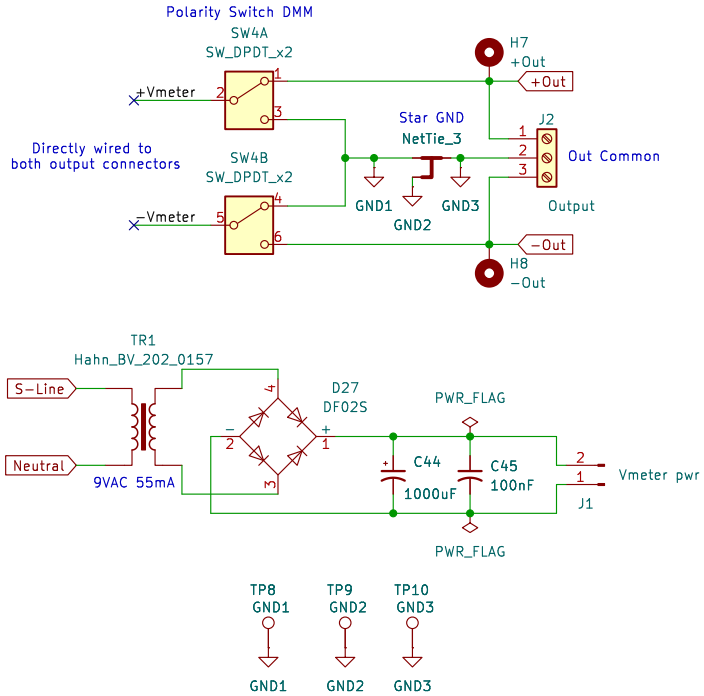

Sheet: /VoltMeter/
File: VoltMeter_v2.kicad_sch

Title:

Size: A4	Date:	Rev:
KiCad E.D.A. 9.0.7		Id: 6/6